Optics & Photonics

Indzawo Optic Connect

Fiber Optic and Multimode Connections

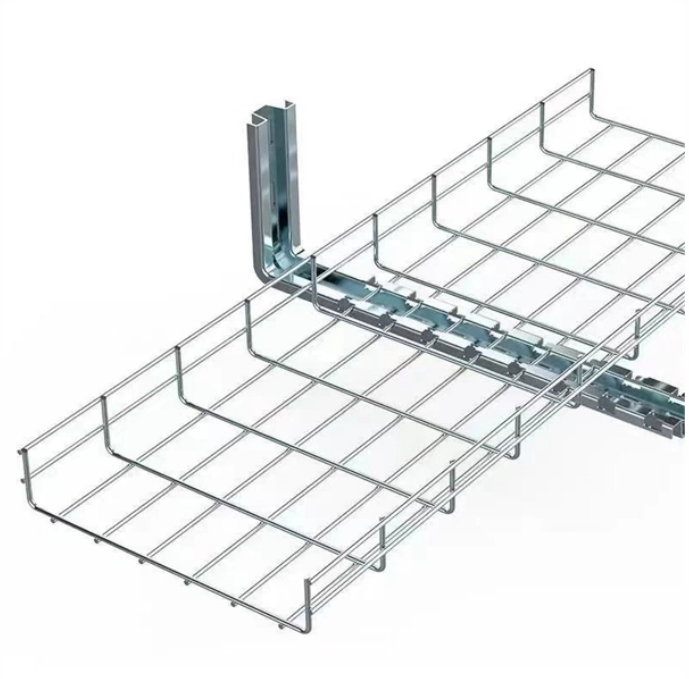

© 2026 Indzawo Optic Connect - All rights reserved

Fiber Optic and Multimode Connections

	There are two main types of fiber optic cables: single mode and multimode. Although they can do the same job in some instances, the different construction methods make each of them better ...
	A complete guide to multimode fiber types OM1, OM2, OM3, OM4, and OM5. Compare speed, distance, bandwidth, and applications, and learn how to choose.
	Our comprehensive guide to types of fiber optic cables. Learn all about the differences between single mode and multimode cables, as well as the various fiber wavelengths and standard core sizes used ...
	Learn the key differences between single mode vs multimode fiber cables and choose the right one for your fiber optic system.
	This comprehensive comparison covers core size, bandwidth, transmission distance, modal dispersion, and optics cost—plus when to deploy each in real-world scenarios like enterprise ...

© 2026 Indzawo Optic Connect - All rights reserved

Explore multimode fiber optic cables for enterprise, campus, and data center networks. Learn about OM1–OM5 types, transmission ranges, installation tips, and cost-effective high-speed ...

Compare OM1, OM2, OM3, OM4, and OM5 multimode fiber specs, distances, bandwidth, and applications. Essential guide for data center fiber selection.

Identified by ISO 11801 standard, multimode fiber optic cables can be classified into OM1 fiber, OM2 fiber, OM3 fiber, OM4 fiber and newly released OM5 fiber. The next part will compare ...

Identified by ISO 11801 standard, multimode fiber optic cables can be classified into OM1 fiber, OM2 fiber, OM3 fiber, OM4 fiber and newly released ...

Although single-mode optical fiber holds advantages in terms of bandwidth and reach for longer distances, multimode optical fiber easily supports most distances required for enterprise and data ...

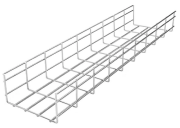

Fiber Optic Cable Buying Guide Understand how to choose fiber optic cable by comparing single-mode vs. multimode, network speed and distance needs, cable jackets/fire ratings, connectors, cost and ...

© 2026 Indzawo Optic Connect - All rights reserved

Contact Us

For more information, pricing, or custom solutions, please contact us:

Website: https://www.indzawo.co.za
Email: sales@indzawo.co.za
Phone: +27 71 296 8473
Address: 22 Quantum Street, Midrand, 1685, Gauteng, South Africa

This document is for informational purposes only. Specifications subject to change without notice.

© 2026 Indzawo Optic Connect - All rights reserved